Connection, 150 c/c

Article number: S600013.62
Description: Brushed brass PVD

- 1/2" ext. x 3/4" ext.
- Connected to wallbox
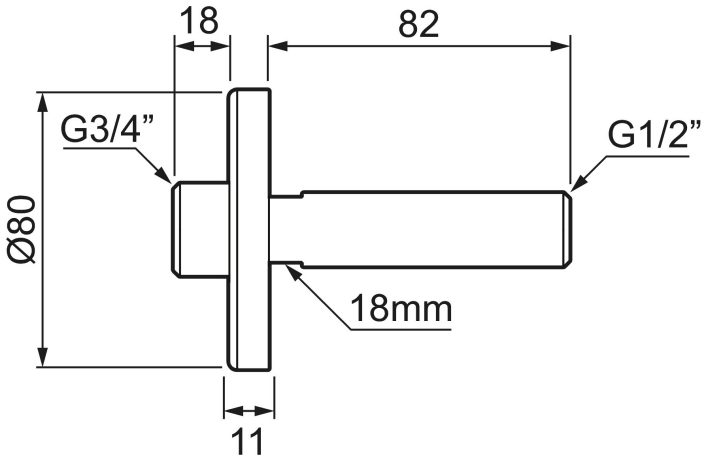
Uniqe characteristics