MORA ONE bath & shower system kit

Technical innovation, craftmanship and design go hand in hand in the Mora One series. The shower lifts the entire bathroom and guarantees a relaxing experience needed in the stress of everyday life. Thomas Sandell, architect and designer, has created a sober and elegant series of mixers gently expressing usability, beauty and durability. Mora One is available as a shower and head shower set, or as a complete shower system kit including shower or bath mixer.

Article number: 262100 **Flow 3 bar:** 20.0 l/m
Description: Chrome

Uniqe characteristics

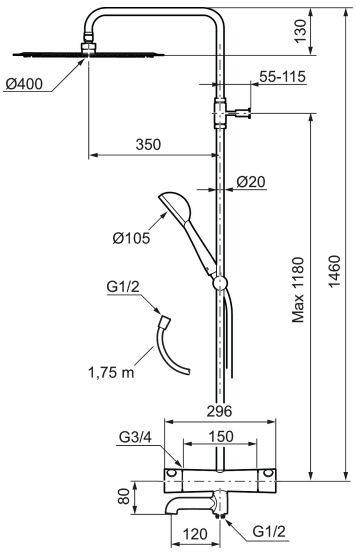

Consist of:

Mora One thermostatic mixer:

- Pressure balanced thermostatic mixer
- With reversible headwork
- Temperature handle with safety stop at 38°C
- With Eco-function
- Approved non-return valves, EN-Standard EN1717

Mora One Shower System:

- Shower hose in metal, PVC- and BPA-free
- With Easy-Clean anti-limescale system
- Shower bar can be shortened if required
- Hand shower 9 l/min, shower head 20 l/min