LYNX shower system kit

Everyday luxury is the driving force behind the LYNX shower system kit, which offers the ease of a handheld shower and a seductive overhead experience in one package. It is available in chrome or matte black.

Article number: 341800.12LD6 **Flow 3 bar:** 6.0 l/m
Description: Matte black, 160 c/c, LEED/BREEAM compliant

Consist of:

MORA LYNX thermostatic mixer:

- Pressure balanced thermostatic mixer
- With reversible headwork
- Temperature handle with safety stop at 38°C
- With Eco-function
- Lead Free material
- Approved non-return valves, EN-Standard EN1717

MORA LYNX Shower System:

- Shower hose in metal, PVC- and BPA-free
- With Easy-Clean anti-limescale system
- Wall bracket freely adjustable in height, 700–1000 from connection and 50–100 mm from wall, 2x20 mm spacers included, with sealing, hidden pipe joint

Uniqe characteristics

Accepted
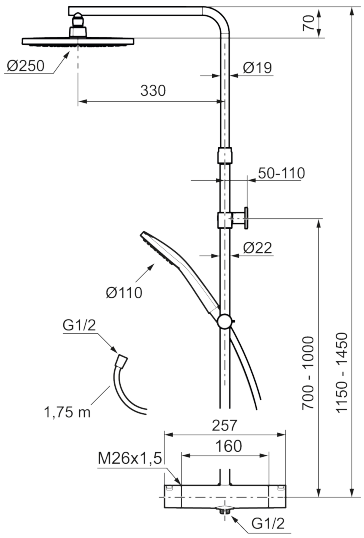
Backflow protection unit type EB